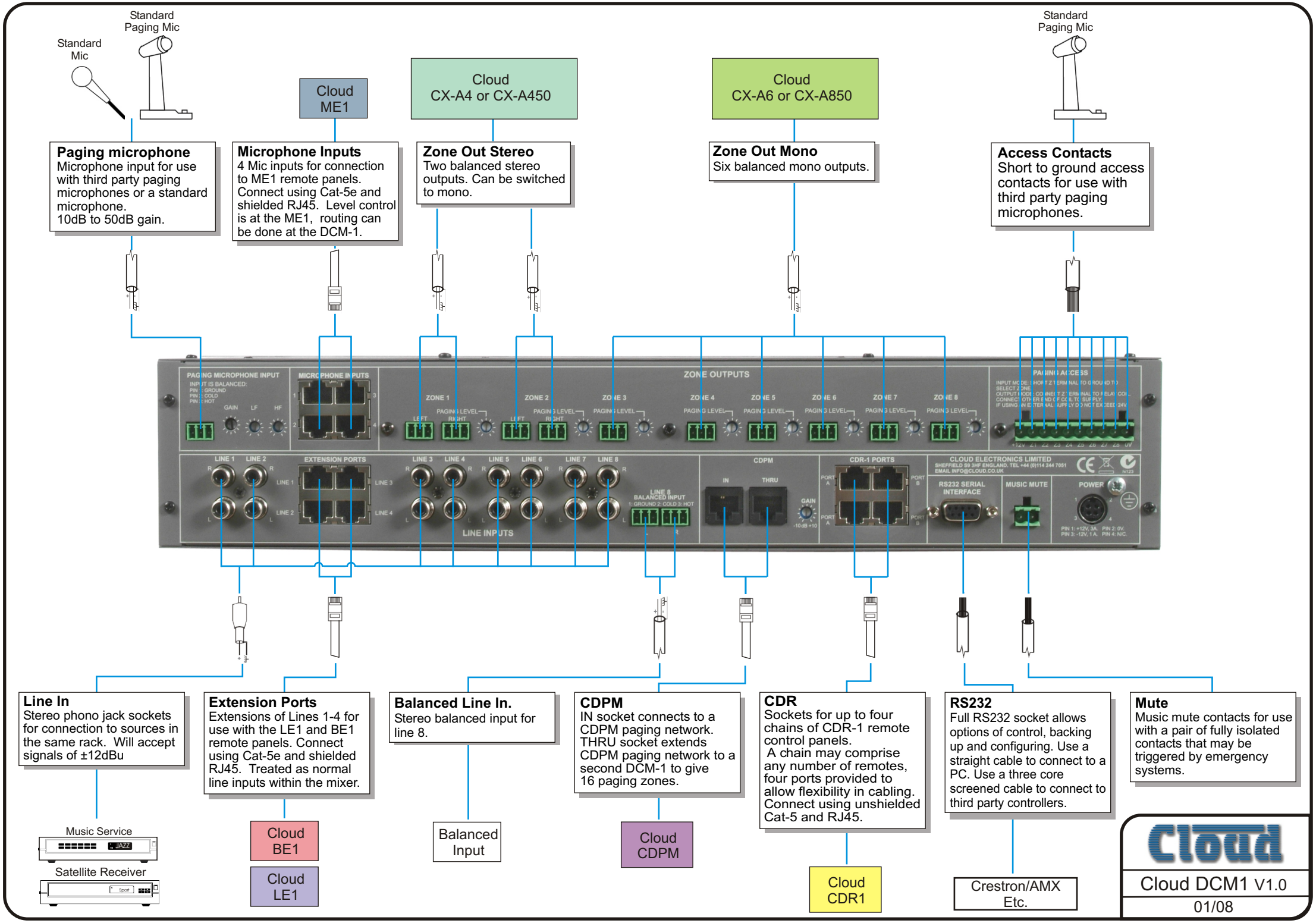
Standard Paging Mic
Standard Mic
Cloud ME1
Cloud CX-A4 or CX-A450
Cloud CX-A6 or CX-A850
Standard Paging Mic
Paging microphone
Microphone input for use with third party paging microphones or a standard microphone.
10dB to 50dB gain.
Microphone Inputs
4 Mic inputs for connection to ME1 remote panels. Connect using Cat-5e and shielded RJ45. Level control is at the ME1, routing can be done at the DCM-1.
Zone Out Stereo
Two balanced stereo outputs. Can be switched to mono.
Zone Out Mono
Six balanced mono outputs.
Access Contacts
Short to ground access contacts for use with third party paging microphones.
PAGING MICROPHONE INPUT
MICROPHONE INPUTS
ZONE OUTPUTS
ZONE 1
ZONE 2
ZONE 3
ZONE 4
ZONE 5
ZONE 6
ZONE 7
ZONE 8
PAGING ACCESS
LINE 1
LINE 2
EXTENSION PORTS
LINE 3
LINE 4
LINE 5
LINE 6
LINE 7
LINE 8
LINE INPUTS
CDPM
CDR-1 PORTS
CLOUD ELECTRONICS LIMITED
RS232 SERIAL INTERFACE
MUSIC MUTE
POWER
Line In
Stereo phono jack sockets for connection to sources in the same rack. Will accept signals of ±12dBu
Extension Ports
Extensions of Lines 1-4 for use with the LE1 and BE1 remote panels. Connect using Cat-5e and shielded RJ45. Treated as normal line inputs within the mixer.
Balanced Line In.
Stereo balanced input for line 8.
CDPM
IN socket connects to a CDPM paging network. THRU socket extends CDPM paging network to a second DCM-1 to give 16 paging zones.
CDR
Sockets for up to four chains of CDR-1 remote control panels.
A chain may comprise any number of remotes, four ports provided to allow flexibility in cabling. Connect using unshielded Cat-5 and RJ45.
RS232
Full RS232 socket allows options of control, backing up and configuring. Use a straight cable to connect to a PC. Use a three core screened cable to connect to third party controllers.
Mute
Music mute contacts for use with a pair of fully isolated contacts that may be triggered by emergency systems.
Music Service
Satellite Receiver
Cloud BE1
Cloud LE1
Balanced Input
Cloud CDPM
Cloud CDR1
Crestron/AMX Etc.
Cloud
Cloud DCM1 V1.0
01/08